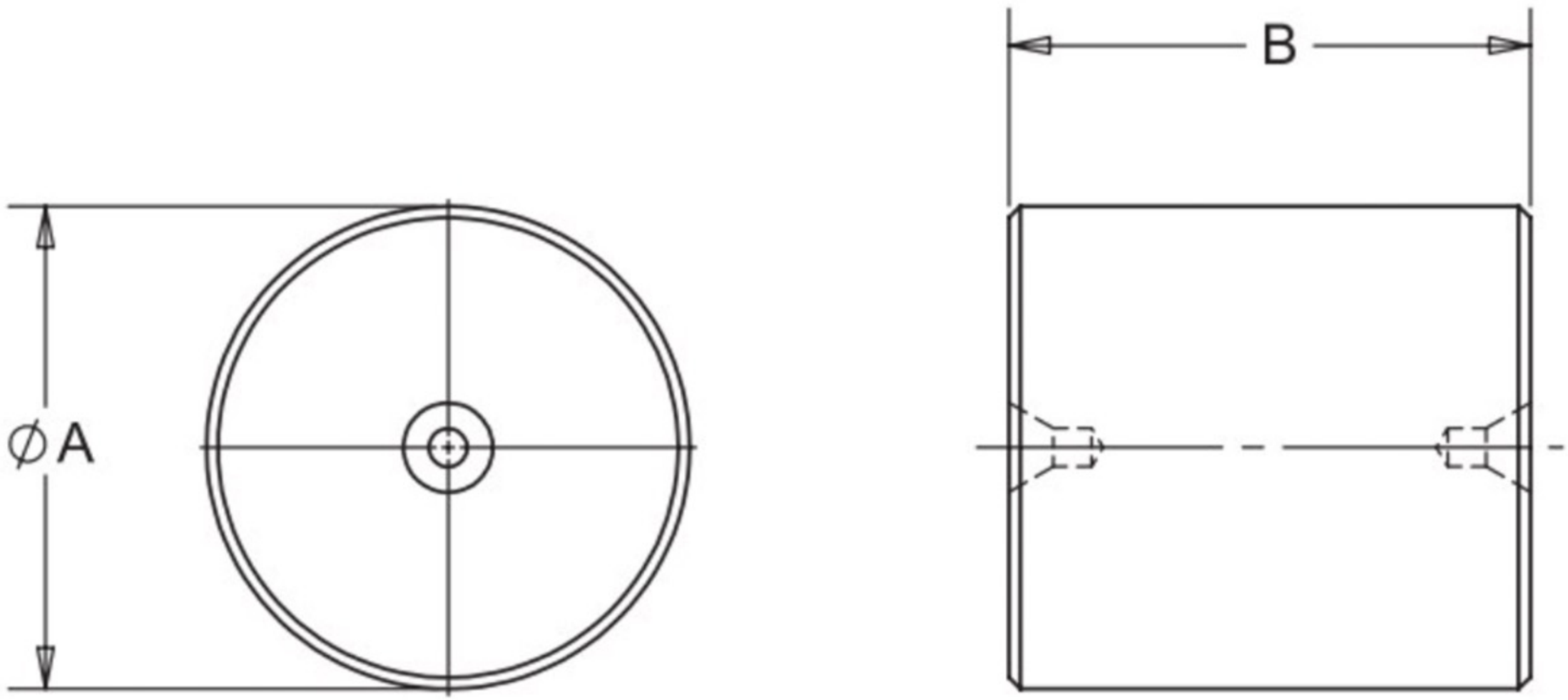
B
∅A