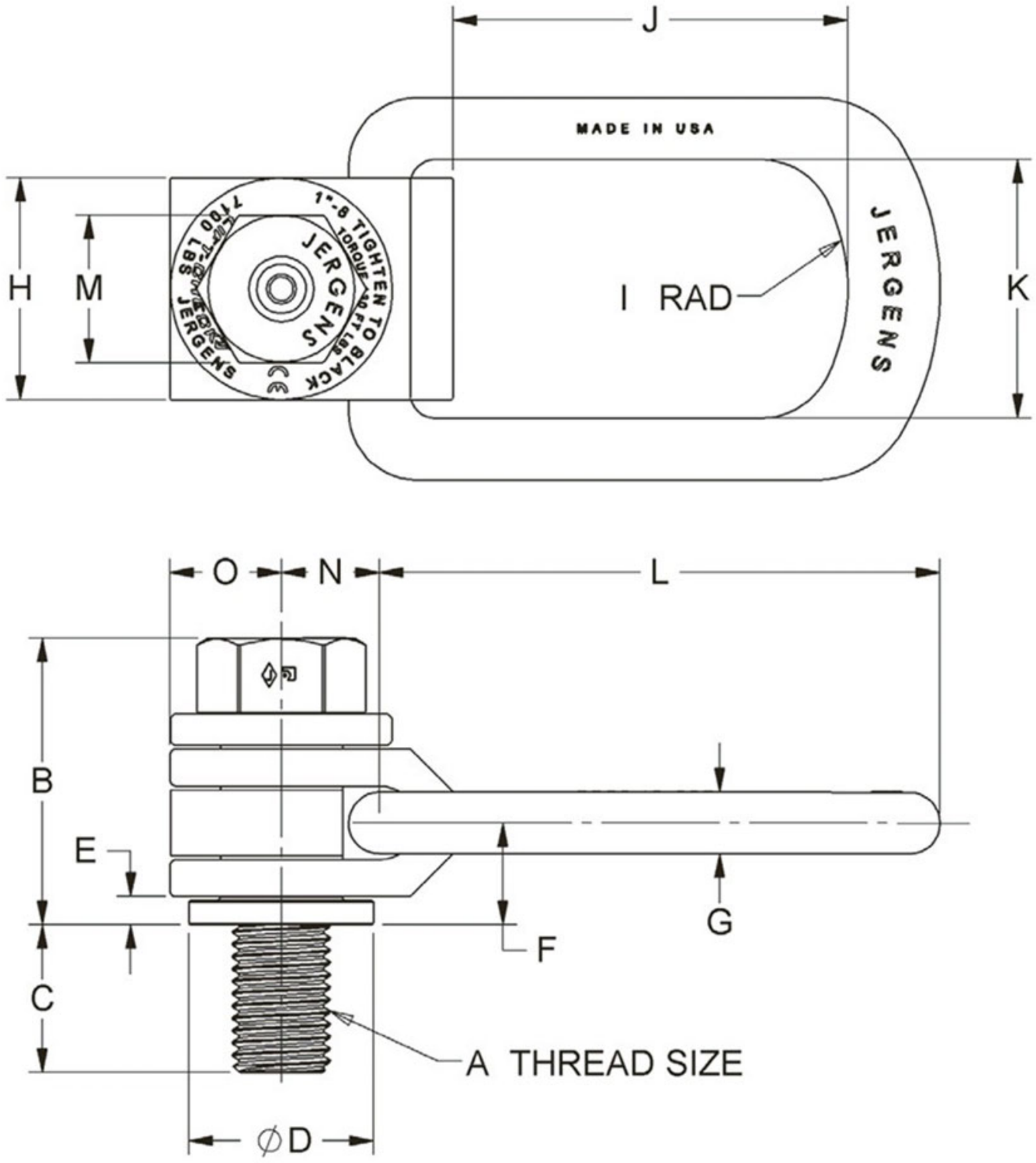
J
MADE IN USA
H
M
1"-8 TIGHTEN TO BLACK
TORQUE 10 FT LBS
7100 LBS
JERGENS
JERGENS
JERGENS
I RAD
K
O
N
L
B
E
F
G
C
A THREAD SIZE
∅D