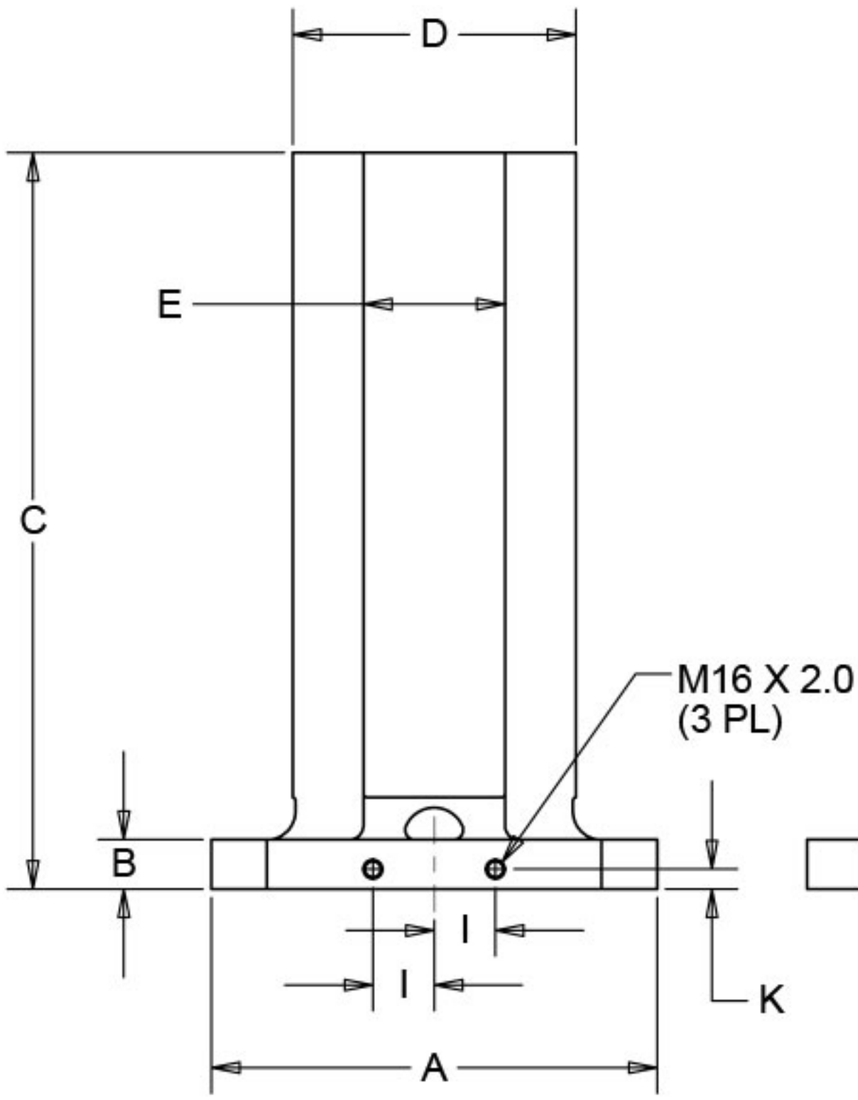
D
E
C
B
M16 X 2.0
(3 PL)
I
I
K
A

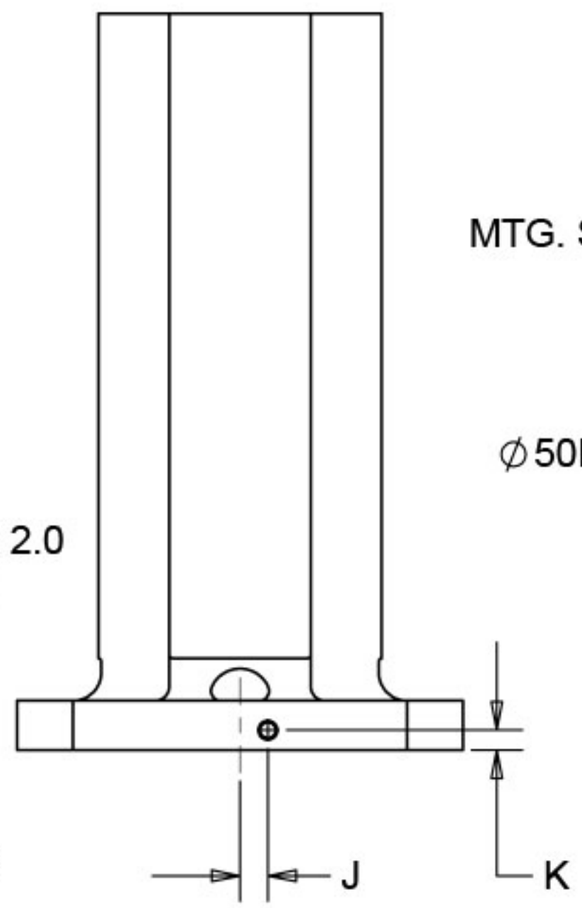
J
K

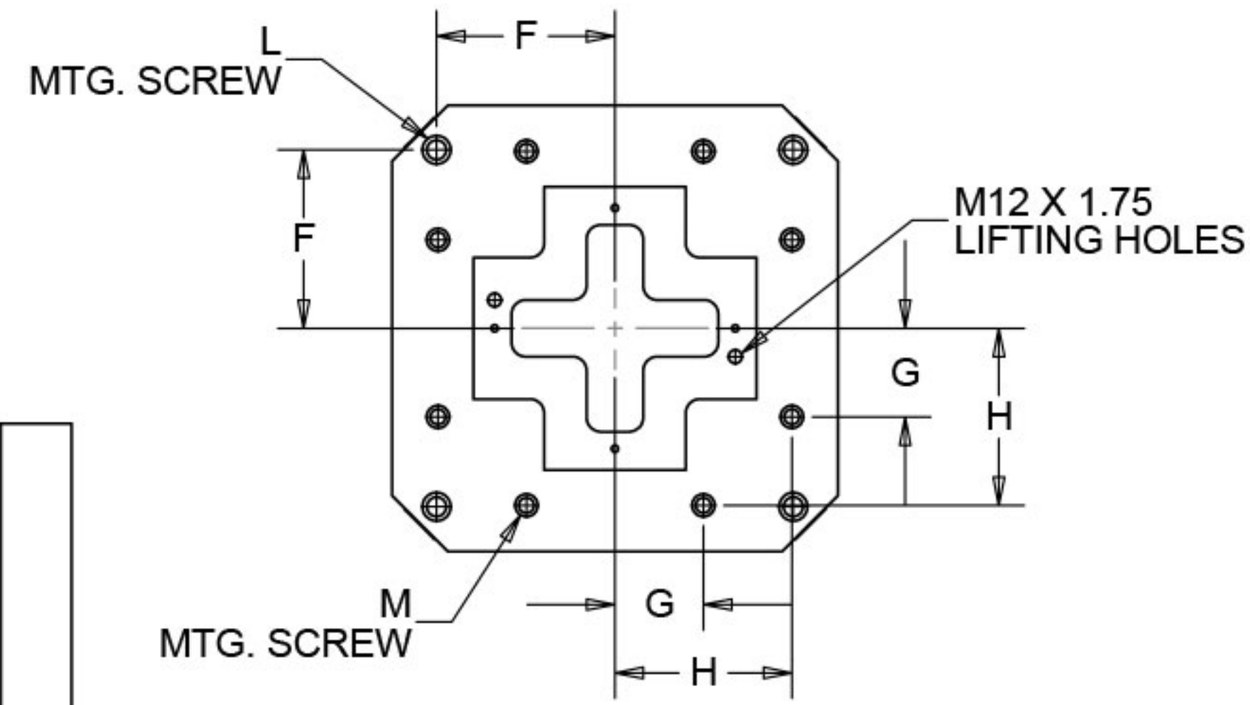
L
MTG. SCREW
F
F
M12 X 1.75
LIFTING HOLES
G
H
M
MTG. SCREW
G
H

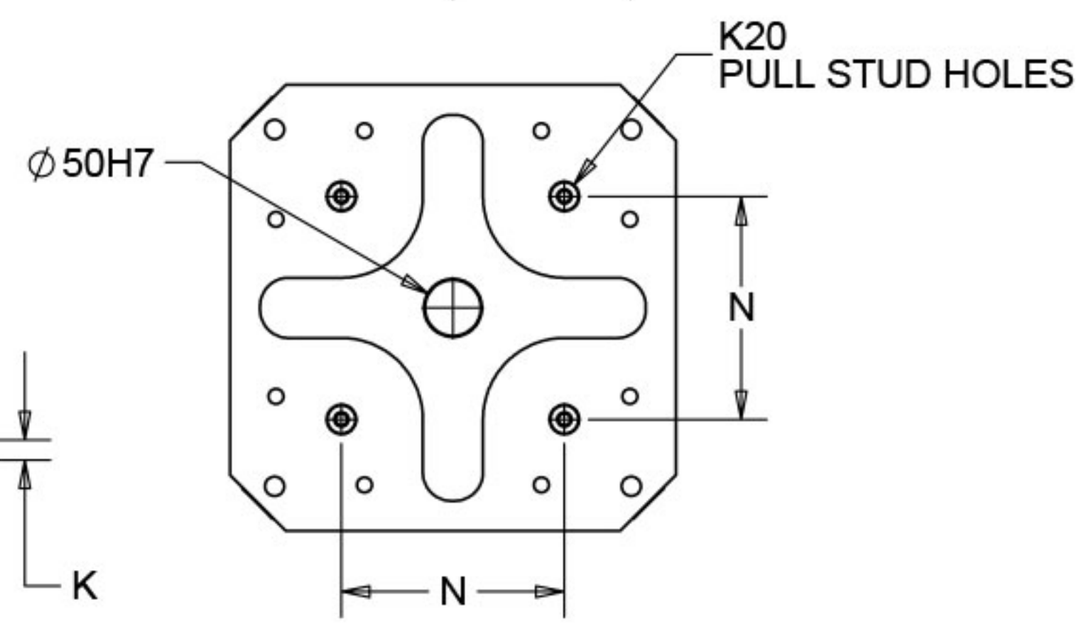
K20
PULL STUD HOLES
∅50H7
N
N